JYEBAO www.jyebao.com.tw

N9146A-L100	**N Reverse Polarity Jack Crimp For Panel Receptacle 50Ω**

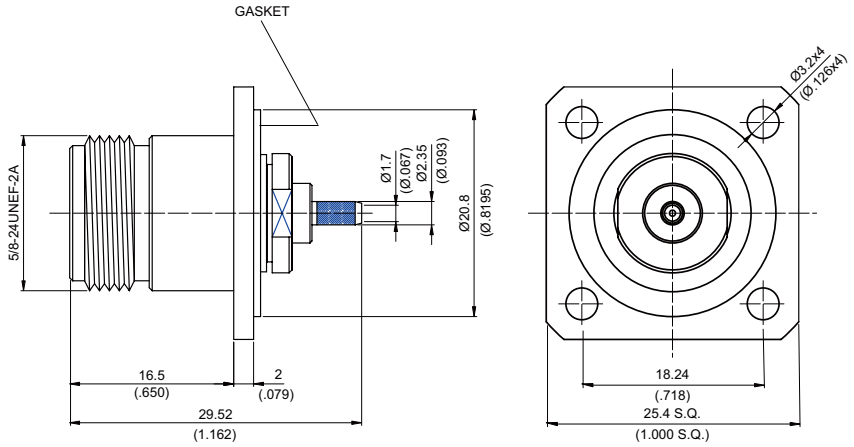

MOUNTING HOLE

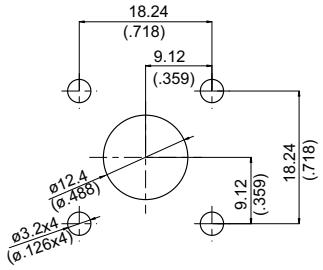

Parts	Material	Plating (Micro-inch)
Gasket	Silicon	
Ferrule	Brass	Tin-Zinc-Copper-Alloy 100 Over Copper 50
Solder Nut	Brass	Tin-Zinc-Copper-Alloy 100 Over Copper 50
Insulator	Teflon	
Contact Pin	Brass	Gold 4 Over Nickel Phosphorous Alloy 80 Over Copper 20
Body	Brass	Tin-Zinc-Copper-Alloy 100 Over Copper 50

Weight: Suitable Cables:JBY100	IP67(Mated)

This part number complies with RoHS.
Notice: JYEBAO reserves the right to make modifications deemed appropriate.