JYEBAO www.jyebao.com.tw

N364B2-0000	N Plug For Panel Receptacle 50Ω

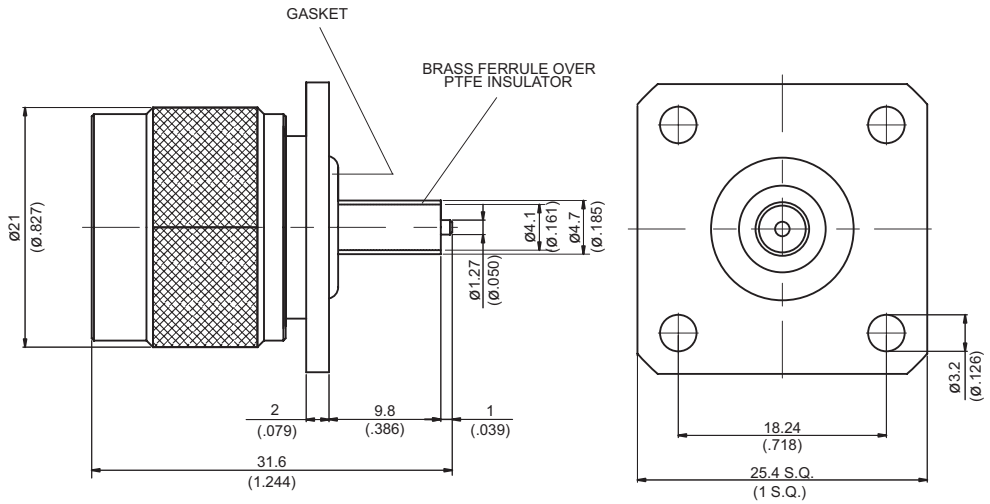

MOUNTING HOLE :

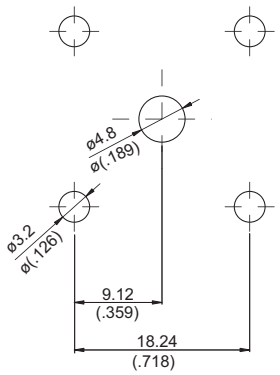

Parts	Material	Plating (Micro-inch)
Ferrule	Brass	Tin-Zinc-Copper-Alloy 100 Over Copper 50
Contact Pin	Brass	Gold 5 over Nickel 50 Over Copper 50
Retainer Ring	Brass	Tin-Zinc-Copper-Alloy 100 Over Copper 50
Gasket	Silicon	
Contact Body	Brass	Tin-Zinc-Copper-Alloy 100 Over Copper 50
Insulator	Teflon	
Body	Brass	Tin-Zinc-Copper-Alloy 100 Over Copper 50
Coupling Nut	Brass	Tin-Zinc-Copper-Alloy 100 Over Copper 50

Weight: 36.4 g

IP67(Mated)

This part number complies with RoHS.
Notice: JYEBAO reserves the right to make modifications deemed appropriate.