NO.	COMPONENTS	IMPEDANCE
1	SMA REVERSE POLARITY FEMALE FOR BULKHEAD	50 OHM
2	JBY195	50 OHM
3	HEAT SHRINKING TUBE	
4	BNC MALE RIGHT ANGLE	50 OHM

REVISION			
REV.	DESCRIPTON	DATE	APPROVED
–	INITIAL RELEASE	2012/08/15	
A	修正SMA螺紋規格	2013/10/01	

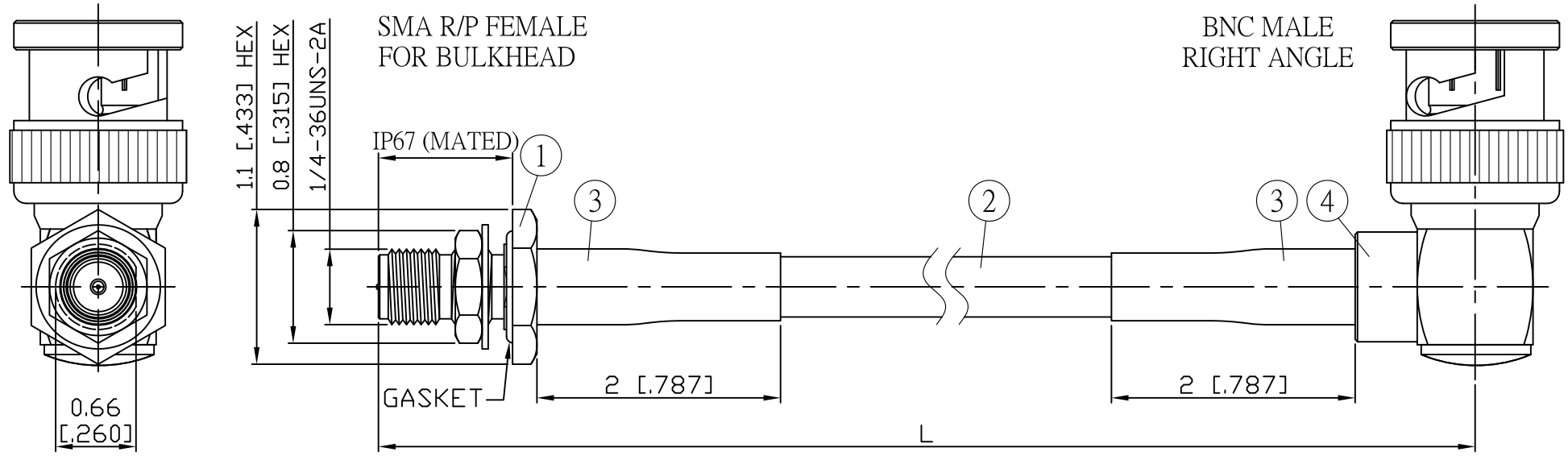

JYE BAO P/N	L CM (INCH)	L1 FT (MM)
A95B39-L195-15	15 (5.906)	0.477 (145.5)
A95B39-L195-30	30 (11.811)	0.969 (295.5)
A95B39-L195-50	50 (19.685)	1.626 (495.5)
A95B39-L195-100	100 (39.370)	3.266 (995.5)
A95B39-L195-150	150 (59.055)	4.906 (1495.5)
A95B39-L195-200	200 (78.740)	6.547 (1995.5)
A95B39-L195-XXX	CUSTOM LENGTH IN CM	– – –

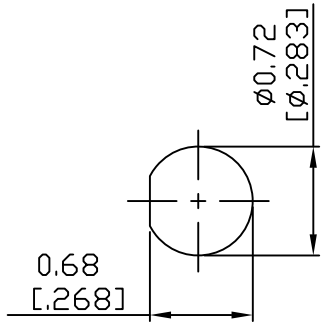

MOUNTING HOLE

NO.	PARTS NO.	DESCRIPTION	Q'TY	U/M
4	BNC3100-9058	BNC PLUG R/A	1	EA
3	G5(F)-8.0MM-BLACK	TUBE	0.04	M
2	JBY195	CABLE	L1 (SEE TABLE)	FT
1	SMA9105-0058	SMA R/P JACK	1	EA

LENGTH TOLERANCE IS ±1.5% OR ±10MM, WHICHEVER IS GREATER.

STANDARD | REV A | UNIT CM(INCH)

APPROVED DATE

CHECKED DATE

DRAWING Albert DATE

JYE BAO CO., LTD.

TAIPEI TAIWAN

DESCRIPTION CABLE ASSEMBLY SMA R/P JACK FOR BULKHEAD TO BNC PLUG R/A

JYE BAO DRAWING NO. A95B39-L195-XXX