NO.	COMPONENTS	IMPEDANCE
1	SMA REVERSE POLARITY FEMALE FOR BULKHEAD	50 OHM
2	RG142	50 OHM
3	HEAT SHRINKING TUBE	
4	BNC MALE RIGHT ANGLE	50 OHM

REVISION			
REV.	DESCRIPTON	DATE	APPROVED
–	INITIAL RELEASE	2012/08/15	
A	修正SMA螺紋規格	2013/10/01	

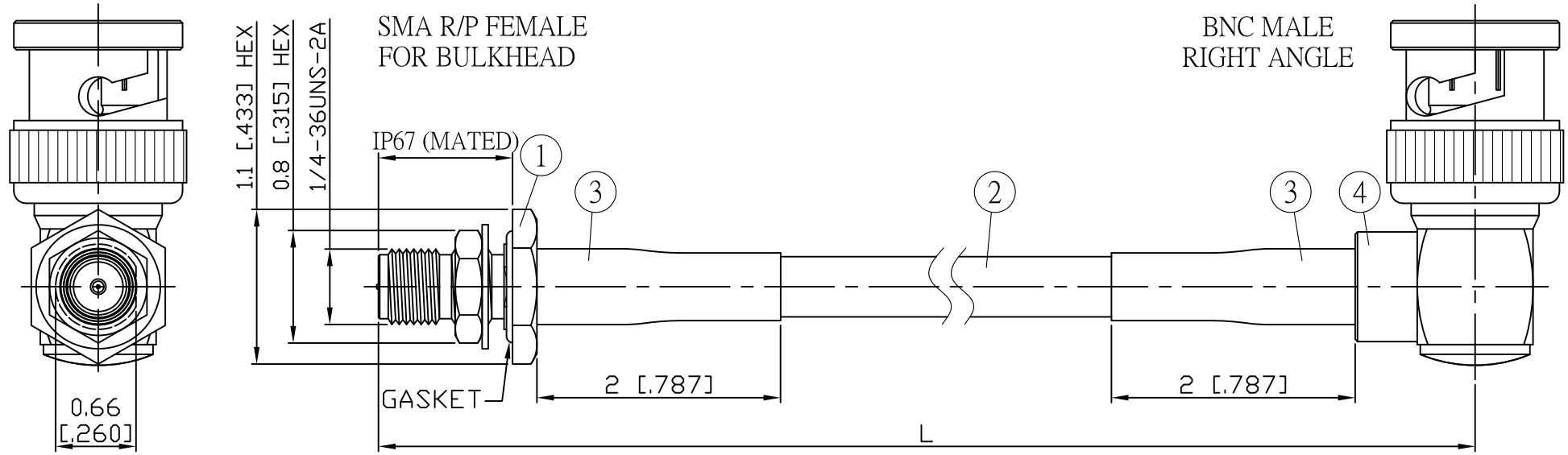

JYE BAO P/N	L CM (INCH)	L1 FT (MM)
A95B39-142-15	15 (5.906)	0.476 (145.0)
A95B39-142-30	30 (11.811)	0.968 (295.0)
A95B39-142-50	50 (19.685)	1.624 (495.0)
A95B39-142-100	100 (39.370)	3.264 (995.0)
A95B39-142-150	150 (59.055)	4.905 (1495.0)
A95B39-142-200	200 (78.740)	6.545 (1995.0)
A95B39-142-XXX	CUSTOM LENGTH IN CM	– – –

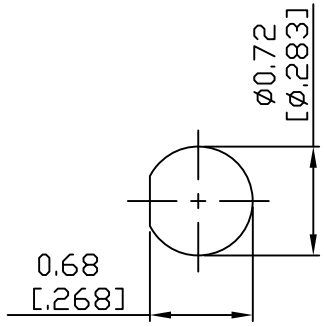

MOUNTING HOLE

NO.	PARTS NO.	DESCRIPTION	Q'TY	U/M
4	BNC3100-9142	BNC PLUG R/A	1	EA
3	G5(F)-8.0MM-BLACK	TUBE	0.04	M
2	RG142	CABLE	L1 (SEE TABLE)	FT
1	SMA9105-0142	SMA R/P JACK	1	EA

LENGTH TOLERANCE IS ±1.5% OR ±10MM, WHICHEVER IS GREATER.

STANDARD | REV A | UNIT CM(INCH)

APPROVED DATE

CHECKED DATE

DRAWING Albert DATE

JYE BAO CO., LTD.

TAIPEI TAIWAN

DESCRIPTION CABLE ASSEMBLY SMA R/P JACK FOR BULKHEAD TO BNC PLUG R/A

JYE BAO DRAWING NO. A95B39-142-XXX