NO.	COMPONENTS	IMPEDANCE
1	SMA MALE RIGHT ANGLE	50 OHM
2	JBY195	50 OHM
3	HEAT SHRINKING TUBE	
4	BNC REVERSE POLARITY FEMALE FOR BULKHEAD	50 OHM

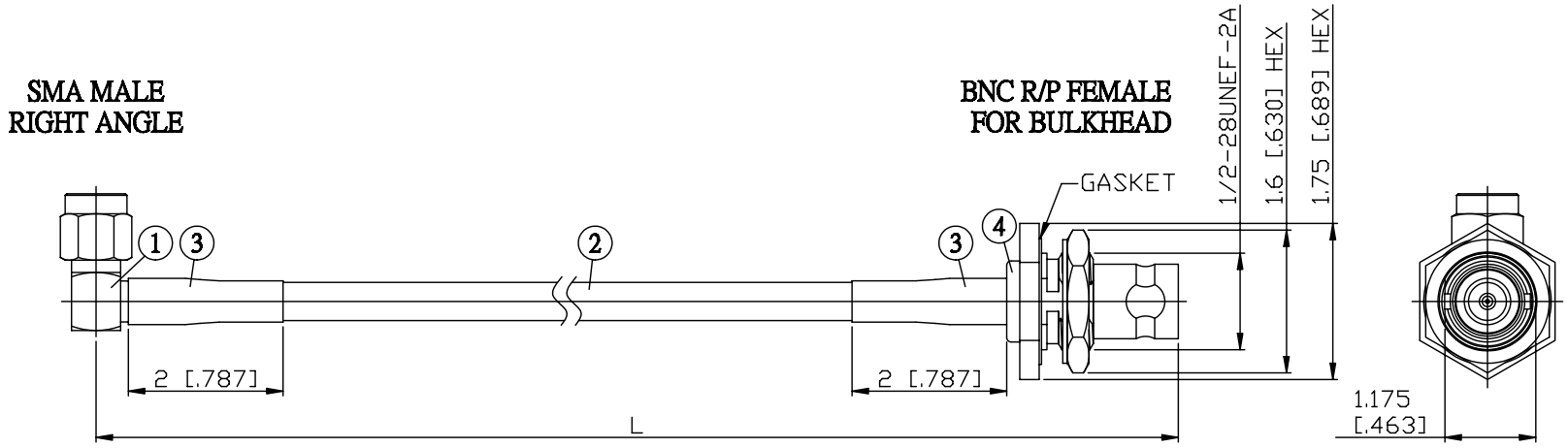

JYE BAO P/N	L CM (INCH)
A39B95-L195-15	15 (5.906)
A39B95-L195-30	30 (11.811)
A39B95-L195-50	50 (19.685)
A39B95-L195-100	100 (39.370)
A39B95-L195-150	150 (59.055)
A39B95-L195-200	200 (78.740)
A39B95-L195-XXX	CUSTOM LENGTH IN CM

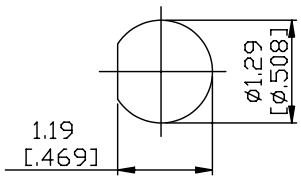

MOUNTING HOLE

LENGTH TOLERANCE IS ±1.5% OR ±10MM, WHICHEVER IS GREATER.

JYE BAO CO., LTD.

TAIPEI TAIWAN

DESCRIPTION: CABLE ASSEMBLY SMA PLUG R/A TO BNC R/P JACK FOR BULKHEAD

JYE BAO DRAWING NO.: A39B95-L195-XXX