NO.	COMPONENTS	IMPEDANCE
1	SMA MALE RIGHT ANGLE	50 OHM
2	.085" HANDBENDABLE CABLE WITH FEP JACKET (=JYEBAO P/N .085SRF-W-P-50-F)	50 OHM
3	HEAT SHRINKING TUBE	
4	SMA FEMALE FOR BULKHEAD	50 OHM

REVISION			
REV.	DESCRIPTON	DATE	APPROVED
–	INITIAL RELEASE	2016/01/20	

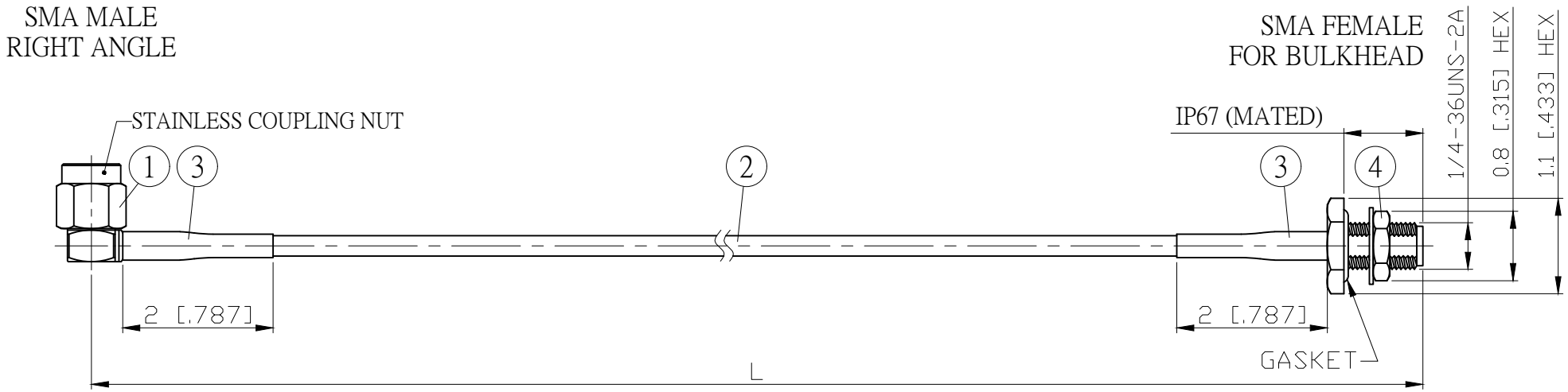

JYE BAO P/N	Freq. (GHz)	Max. Return Loss	L CM (INCH)	L1 FT (MM)
A39A85-85F-18GXXX	18	-16.5dB	50 (19.685)	1.622 (494.5)
			100 (39.370)	3.263 (994.5)
			150 (59.055)	4.903 (1494.5)
			200 (78.740)	6.544 (1994.5)
			CUSTOM LENGTH IN CM	CUSTOM LENGTH IN CM

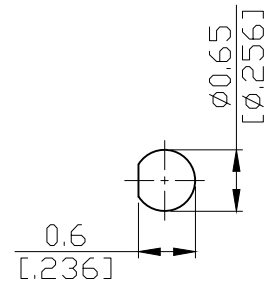

MOUNTING HOLE

NO.	PARTS NO.	DESCRIPTION	Q'TY	U/M
4	SMA8305-0405	SMA JACK	1	EA
3	G5(F)-4.0MM-BLACK	TUBE	0.04	M
2	.085SRF-W-P-50-F	CABLE	L1 (SEE TABLE)	FT
1	SMA33NPC-9405	SMA PLUG R/A	1	EA

LENGTH TOLERANCE IS ±1.5% OR ±10MM, WHICHEVER IS GREATER.

STANDARD | REV – | UNIT CM(INCH)

APPROVED DATE

CHECKED DATE

DRAWING Albert DATE

JYE BAO CO., LTD.

TAIPEI TAIWAN

DESCRIPTION: CABLE ASSEMBLY SMA PLUG R/A TO SMA JACK FOR BULKHEAD

JYE BAO DRAWING NO. A39A85-85F-18GXXX